REVISIONS				
ZONE	REV.	DESCRIPTION	DATE	APPROVED
	01	INITIAL RELEASE	29/10/2015	MG

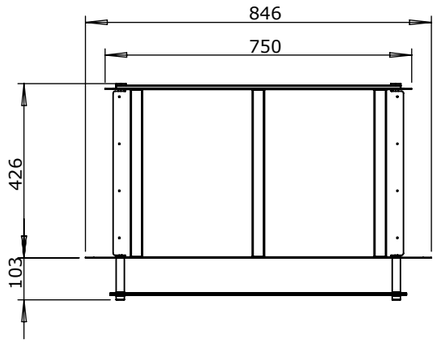

TOP VIEW

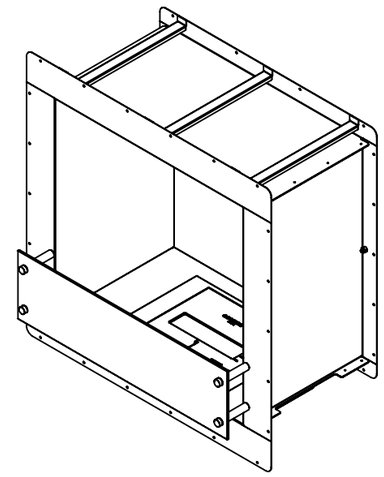

ISOMETRIC VIEW

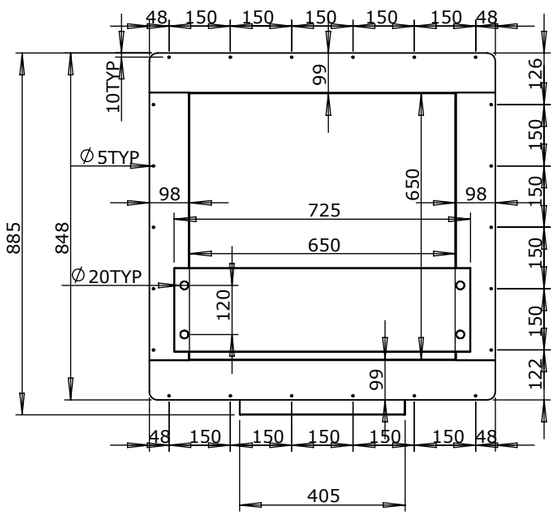

FRONT VIEW

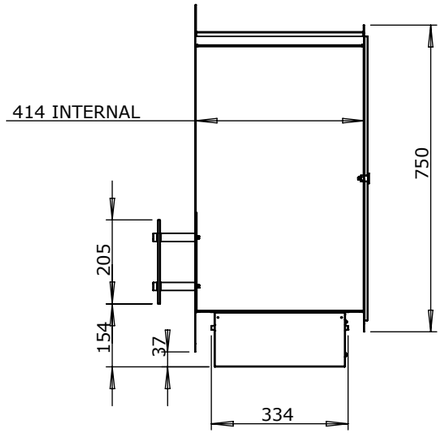

RIGHT SIDE VIEW

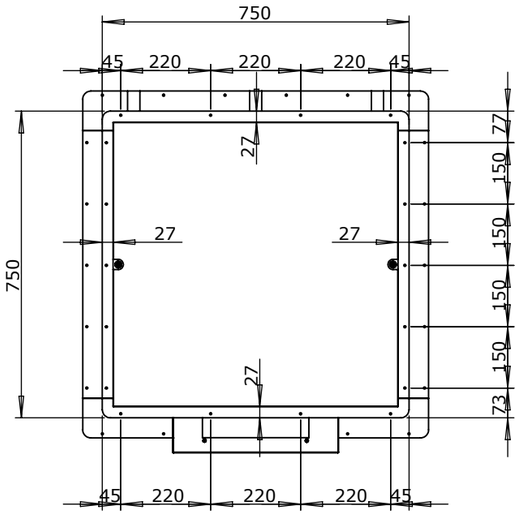

BACK VIEW

QTY PER ASSEMBLY: -

MATERIAL: BRUSHED STAINLESS STEEL, TOUGHENED GLASS

FINISH: -

WEIGHT:

SURFACE AREA: mm2

MAD Design Group Pty Ltd

Showrooms 3 & 4
40-42 O'Riordan Street
Alexandria NSW 2015 - Australia
Tel: +61 2 9997 3050
Fax: +61 2 9997 6050
info@ecosmartfire.com
www.ecosmartfire.com

COPYRIGHT RESERVED FOR: MAD DESIGN GROUP PTY LTD. REPRODUCTION / DISCLOSURE TO THIRD PARTIES IN ANY FORM WHATSOEVER NOT ALLOWED WITHOUT WRITTEN CONSENT OF PROPRIETORS.

DATE	CLIENT	PROJECT	PROJECT Nº.
29/10/2015	ECOSMART FIRE	ESF	FB_650DB

DRAWN	DATE	DRAWING NAME	SHEET
MG	29/10/2015	EFR650DB FIREBOX	1 of 1

CHECK	DATE	DRAWING Nº.	PART Nº.	REV Nº.
RS	29/10/2015	ESF_FB_650DB_G001_R02	-	02

GENERAL TOLERANCES UNLESS SPECIFIED OTHERWISE
DIMENSIONS ARE IN MM UNLESS SPECIFIED OTHERWISE

SHEETMETAL/ MACHINED COMPONENTS		CEMENT/ GLASS/ FOAM COMPONENTS	
LINEAR	±0.25 mm	LINEAR	±1 mm
ANGULAR	±0.5 °	ANGULAR	±0.5 °

SCALE 1:15 | THIRD ANGLE | A3